THE SCIENCE OF SURVIVAL

ResQLink™ 410 RLS & ResQLink™ View RLS

406 MHz Personal Locator Beacons with RLS (Return Link Service)

Product User Manual
Y1-03-0362 Rev. A
Models: PLB-410 & PLB-435
Part Numbers: 2931 & 2932

Name of Owner/Organization:

ACR Electronics, Inc.
5757 Ravenswood Road, Fort Lauderdale, FL 33312
Phone (954) 981-3333, Fax (954) 983-5087
www.acrartex.com

Table of Contents

Beacon (406MHz) Registration	4
Anatomy of a Rescue	7
Important information regarding RLS beacons	8
Anatomy of Your Beacon	9
Activating Your Beacon	11
User Interface: Digital Display during Operation	15
Turning Your Beacon Off	16
Testing Your Beacon – Self-Test	17
User Interface: Digital Display during Self-Test	18
Testing Your Beacon – GPS/GNSS Self-Test	19
User Interface: Digital Display during GPS/GNSS Test	20
Satellite Testing Your Beacon	21
False Alarms	21
Beacon Maintenance	22
Product Specifications	24
Product Warranty	27
Appendix A - Accessories	28

This manual supports all configurations of PLB-410 and PLB-435 beacons. Depending on country of registration, the beacon will have a unique country code identification in the part number (for example, 2931.62 or 2932.64). As long as the first four digits are the same as one of the part numbers on the cover, this manual is applicable. If you have questions regarding the contents of this manual or something not covered in the manual, please contact our Technical Service Department at ACR Electronics, Inc. +1 (954) 862-2110.

Please read all Notes, Warnings and Cautions Carefully.

CAUTION: Before proceeding to test or use your new ACR Electronics, Inc. (ACR) product, please read this Product User Manual in its entirety.

WARNING: The Personal Locator Beacon (PLB) must be promptly registered with the appropriate National Authority. Failure to register the beacon could delay a Search and Rescue (SAR) response and may be unlawful.

WARNING: This transmitter is authorized for use only during situations of grave and imminent danger. Deliberate misuse may incur a severe penalty.

WARNING: Notice to the public, do not move beacon if found, report position to authorities

CAUTION: False alerts endanger lives and cause expensive disruption to Search and Rescue services. Deliberate misuse of the beacon could result in a penalty and fine.

CAUTION: Do not dismantle the PLB. It contains no user-serviceable parts.

CAUTION: Contains lithium batteries. Do not incinerate, puncture, deform, short-circuit or recharge.

Disposal: Remove the Lithium battery. Dispose of the used battery in accordance with local waste disposal regulations.

Air Travel: Product contains small lithium metal batteries that comply with IATA SP 188-PI 970 Air Cargo. Always check with air carrier concerns for any additional restrictions.

Beacon (406 MHz) Registration

Registering Your Beacon

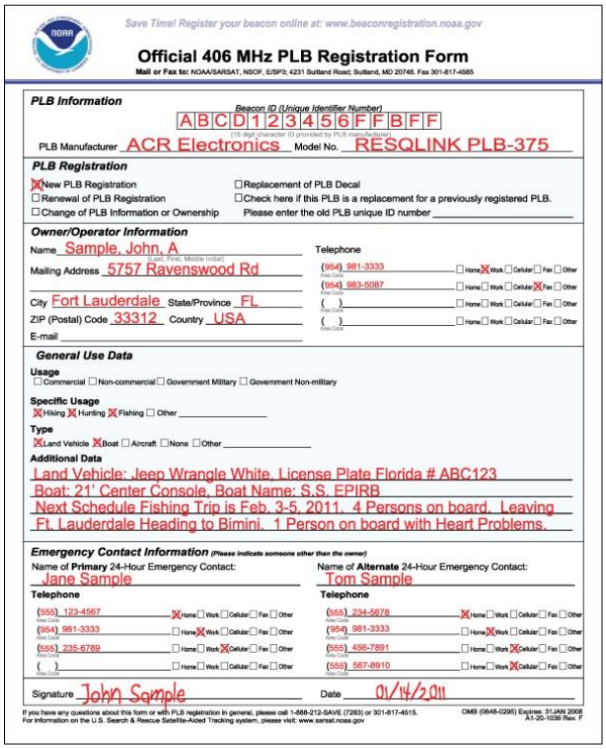

Save Time! Register your beacon online at: www.beaconregistration.noaa.gov

Official 406 MHz PLB Registration Form

Mail or Fax to: NOAA/SARSAT, NSOF, E/SP3; 4231 Suitland Road; Suitland, MD 20746. Fax 301-817-4565

PLB Information

Beacon ID (Unique Identifier Number): A B C D 1 2 3 4 5 6 F F B F F

(15 digit character ID provided by PLB manufacturer)

PLB Manufacturer: ACR Electronics Model No.: RESQLINK PLB-375

PLB Registration

- [x] New PLB Registration
- [ ] Renewal of PLB Registration
- [ ] Change of PLB Information or Ownership
- [ ] Replacement of PLB Decal
- [ ] Check here if this PLB is a replacement for a previously registered PLB. Please enter the old PLB unique ID number ____

Owner/Operator Information

Name: Sample, John, A (Last, First, Middle Initial)

Mailing Address: 5757 Ravenswood Rd

City: Fort Lauderdale State/Province: FL

ZIP (Postal) Code: 33312 Country: USA

E-mail: ____

Telephone:
- (954) 981-3333 [x] Home [ ] Work [ ] Cellular [ ] Fax [ ] Other
- (954) 983-5087 [ ] Home [ ] Work [ ] Cellular [x] Fax [ ] Other
- ( ) [ ] Home [ ] Work [ ] Cellular [ ] Fax [ ] Other
- ( ) [ ] Home [ ] Work [ ] Cellular [ ] Fax [ ] Other

General Use Data

Usage: [ ] Commercial [ ] Non-commercial [ ] Government Military [ ] Government Non-military

Specific Usage: [x] Hiking [x] Hunting [x] Fishing [ ] Other ____

Type: [x] Land Vehicle [x] Boat [ ] Aircraft [ ] None [ ] Other ____

Additional Data:
Land Vehicle: Jeep Wrangle White, License Plate Florida # ABC123
Boat: 21' Center Console, Boat Name: S.S. EPIRB
Next Schedule Fishing Trip is Feb. 3-5, 2011. 4 Persons on board. Leaving Ft. Lauderdale Heading to Bimini. 1 Person on board with Heart Problems.

Emergency Contact Information (Please indicate someone other than the owner)

Name of **Primary** 24-Hour Emergency Contact: Jane Sample

Telephone:
- (555) 123-4567 [x] Home [ ] Work [ ] Cellular [ ] Fax [ ] Other
- (954) 981-3333 [ ] Home [x] Work [ ] Cellular [ ] Fax [ ] Other
- (555) 235-6789 [ ] Home [ ] Work [x] Cellular [ ] Fax [ ] Other
- ( ) [ ] Home [ ] Work [ ] Cellular [ ] Fax [ ] Other

Name of **Alternate** 24-Hour Emergency Contact: Tom Sample

Telephone:
- (555) 234-5678 [x] Home [ ] Work [ ] Cellular [ ] Fax [ ] Other
- (954) 981-3333 [ ] Home [x] Work [ ] Cellular [ ] Fax [ ] Other
- (555) 456-7891 [ ] Home [ ] Work [x] Cellular [ ] Fax [ ] Other
- (555) 567-8910 [ ] Home [ ] Work [x] Cellular [ ] Fax [ ] Other

Signature: John Sample Date: 01/14/2011

If you have any questions about this form or with PLB registration in general, please call 1-888-212-SAVE (7283) or 301-817-4515. For information on the U.S. Search & Rescue Satellite-Aided Tracking system, please visit: www.sarsat.noaa.gov

OMB (0648-0295) Expires: 31JAN 2008 A1-20-1030 Rev. F

How Registration Works

All 406 MHz beacons transmit a Unique Identifier Number (UIN) when activated. The UIN is identified as the 15 digit Hex ID on the beacon (see enlarged label image below for location of Hex ID on your beacon). This Hex ID/UIN is programmed into the beacon based on the country in which the beacon is registered, thus authorities are able to determine which country's database will have your registration information. Information provided during registration is used only for rescue purposes and provides Search and Rescue forces with information as to who you are as the owner of the beacon, the name and type of vessel that you have (if applicable), your address, and who to contact that might know of your situation, but only if your beacon has been properly registered.

Valuable search and rescue resources are wasted every year responding to false alerts. Please register your beacon immediately to help resolve this issue of wasted resources.

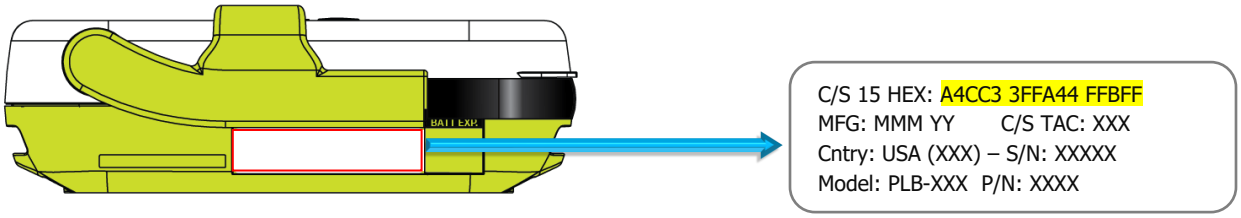

Beacon (406 MHz) Registration

What country should I register in? The beacon must be registered in the country of the owner's residence. If the beacon is not programmed to that country's code and protocol, and the residence is out of the USA, the beacon needs to be reprogrammed.

Additionally, the beacon must be reprogrammed if you, as the owner, move out of the country where the beacon is registered. To verify the country for which a beacon is programmed, see the label with the Unique Identification Number on the side of the unit.

For a complete list of all countries with registration information visit www.406registration.com

The fastest and easiest way to register is online at: www.beaconregistration.noaa.gov/

Or send the original, signed form by mail to:

NOAA SARSAT Beacon Registration
NSOF E/SPO53
1315 East West Hwy
Silver Spring, MD 20910-3282

Or fax form to :
301-817-4565

Please check to make sure that your PLB is registered correctly.

How do I register?

Registration in the United States – The national authority that accepts registrations in the United States is the National Oceanic and Atmospheric Administration (NOAA). A NOAA registration form is included with U.S. coded ACR PLBs (Australian coded ACR PLBs include a registration card and New Zealand coded ACR PLBs include a registration form).

If not registering online, hard copies of registration forms will be entered in the 406 MHz beacon registration database within 48 hours of receipt. The information you provide on the registration form is used for rescue purposes only.

A confirmation letter, a copy of the registration, and a registration decal (see sample image on the left in the "User Tip" window below) will be mailed to you within two weeks by NOAA. When you receive these documents, please check the information carefully, and then affix the decal to your beacon in the area marked "Place Beacon Decal Here."

It is very important that the UIN on the registration decal matches the UIN on the beacon label (see sample beacon label on the right and sample registration decal on the left in the "User Tip" window below). If you do not receive your registration decal back from NOAA within two weeks, call this toll free number (888) 212-7283 for assistance.

User Tip

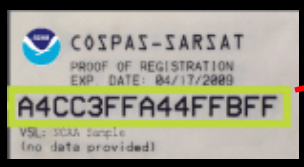

C/S 15 HEX: A4CC3 3FFA44 FFBFF
MFG: MMM YY C/S TAC: XXX
Cntry: USA (XXX) – S/N: XXXXX
Model: PLB-XXX P/N: XXXX

Beacon (406 MHz) Registration

Registration in Canada

Canadian registration form is included with Canadian coded ACR PLBs

The fastest and easiest way to register is online at:
http://canadianbeaconregistry.forces.gc.ca/

Or mail to:

Canadian Beacon Registry
CFB Trenton, PO Box 1000 Stn Forces,
Astra, Ontario K0K 3W0

Or fax to:

Fax registration form:

(877) 406-3298

This radio device is designed to only provide an effective alerting and locating capability in close proximity to a vessel. This radio beacon is NOT an EPIRB (Cette radiobalise est conçue uniquement dans le but de fournir une fonction d'alerte et de localisation efficace à proximité immédiate d'un navire. Cette radiobalise n'est PAS une RLS).

This device contains licence-exempt transmitter(s)/receiver(s) that comply with Innovation, Science and Economic Development Canada's licence-exempt RSS(s). Operation is subject to the following two conditions:

(1) This device may not cause interference.
(2) This device must accept any interference, including interference that may cause undesired operation of the device.

Registration in Other Countries

In countries other than the United States and Canada, 406 MHz beacons are registered with that country's national authority at the time of purchase. The sales agent may have assisted you in filling out the forms and sending them to the country's national authority.

To verify that the unit is properly programmed for your country, view the UIN label on the back of the unit. In the event that the beacon is not programmed for your country, the sales agent (if properly equipped) can reprogram the unit for the correct country.

International customers should visit

www.406registration.com

and view the Beacon Registration Contacts List to find the proper location to register your beacon.

Anatomy of a Rescue

How the Beacon Works

How your beacon summons help:

406 MHz beacons are a type of portable emergency equipment that transmits a distress signal to search and rescue (SAR) organizations. The purpose of these beacons is to aid SAR teams in tracking and locating ships or individuals in jeopardy as rapidly as possible.

Learn more about the Cospas-Sarsat satellite system: www.cospas-sarsat.org

The 406 MHz frequency is a worldwide dedicated emergency frequency that is detected by a network of satellites called the Cospas-Sarsat system. This satellite system was established by, and continues to be supported by, its primary benefactors – the USA, Russia, Canada and France. The Cospas-Sarsat system has saved tens of thousands of lives, and counting, since its inception.

When a 406 MHz beacon is activated, the digital distress message is sent to Cospas-Sarsat satellites and, in turn, the distress message is relayed to SAR forces via a Rescue Coordination Centre (RCC). The distress message contains the beacon UIN and on some models, the GPS location of the beacon. Additional information about the beacon is accessed by SAR forces from the beacon registration database. At the same time the 406 MHz signal is activated, a 121.5 MHz signal is turned on. The 121.5 MHz signal is used by SAR forces to home in on the beacon as they approach it.

The 406 MHz signal is detected by multiple satellites and from that information the location of the beacon can be calculated. This data alone is sufficient for SAR to find persons or ships in distress in a reasonable timeframe. However, as a further enhancement, some beacons have a GPS engine on board (all ACR PLB's currently manufactured include a GPS engine on board) which allows for an even more precise location of the beacon to be sent to SAR.

Return Link Service (RLS)

Additionally, beacons with Return Link Service (RLS) functionality (eg. PLB-410 & PLB-435) provide confirmation to the user that their beacon's emergency message has been received and that their location has been detected. RLS works by sending a signal back through the Cospas Sarsat network to confirm to the beacon user that the distress alert from a beacon has been received, and their location detected, by flashing a blue light (PLB-410) or flashing a blue light and displaying a message on a digital display (PLB-435).

Important Information Regarding RLS Beacons

The PLB-410 and PLB-435 beacons have the Return Link Service (RLS) feature. The RLS feature is an indication on the beacon (see the section of this manual on "Activating your Beacon") that confirms to the beacon user that the distress signal from an activated beacon has been localized by the Cospas-Sarsat system and is being sent to the responsible search-and-rescue (SAR) authorities. It does NOT mean that a search and rescue has yet been organized/launched, only the fact that the distress alert has been received and is being routed to the appropriate SAR agencies.

The RLS is designed to send an acknowledgment to the beacon. Alerting of the distress to SAR authorities is independent of (and likely will occur before) the RLS acknowledgment indication on the beacon. This specification is described in the Galileo SAR Service Definition Document (https://www.gsc-europa.eu/sites/default/files/sites/all/files/Galileo-SAR-SDD.pdf).

You may visit the web page on Countries Allowing RLS Beacons (https://cospas-sarsat.int/en/beacon-ownership/rls-enabled-beacon-purchase) to learn the most recent information about regional/global support for RLS.

Cospas-Sarsat strongly recommends that you register your beacon. It only is possible to register a beacon in the registry operated by the country matching the "country code" (generally matching the country of point of sale) electronically programmed into the beacon (or the International Beacon Registration Database (IBRD) (https://www.406registration.com/)) if the country uses it for their registrations). For example, it only is possible to register a beacon with a French country code in France's national registry. However, owners of Belgian-coded beacons must register in the IBRD. The country code is encoded in the beacon's unique identification number (UIN, also called Hex ID), which is used to register the beacon. Visit Where to Register My Beacon (https://www.406registration.com/countriessupported.aspx) to see where you can register your beacon.

Anatomy of your Beacon (PLB-410)

Anatomy of your Beacon

A. Antenna Latch – Latch unlocks antenna from the beacon body. When unclipped, the antenna can be deployed to uncover ON/OFF button.

B. Strobe Light – Activates when the beacon is turned on. Facilitates rescue during low-light emergencies.

C. Green LED light – Visual indicator of beacon activity.

D. Red LED light – Visual indicator of beacon activity.

E. Blue LED light – Visual indicator of RLS (Return Link Service) beacon activity

F. GPS Receiver – Location of GPS receiver, give clear view to sky and do not obstruct.

G. ON/OFF button – Activates the beacon when pressed for 2 seconds. Once activated, pressing the on/off button for 2 seconds again turns the beacon off. (Button is not accessible until antenna is deployed).

H. TEST button– Activate Self-test or GPS test.

I. Antenna – Wraps around product and protects ON/OFF button.

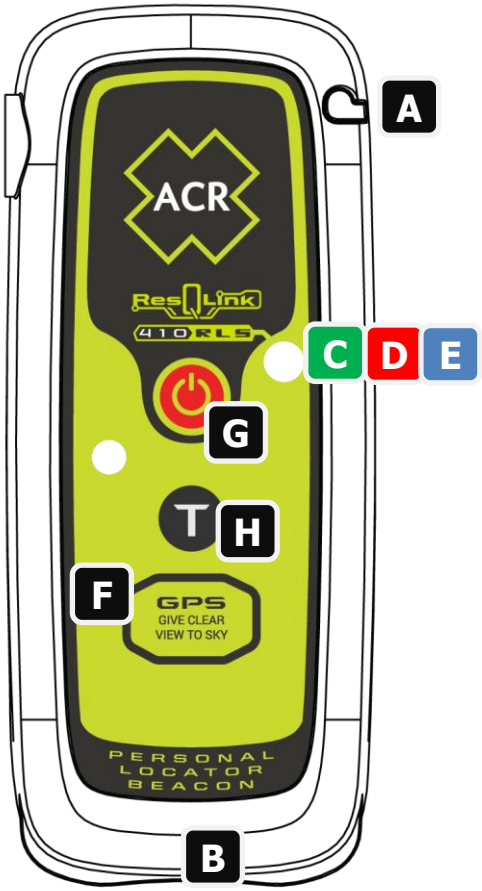

WARNING: This transmitter is authorized for use only during situations of grave and imminent danger. Deliberate misuse may incur a severe penalty.

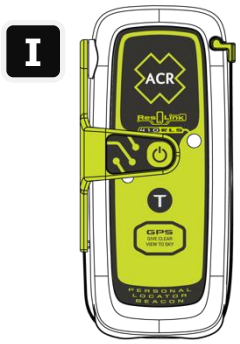

PLB WITH
ANTENNA CLOSED

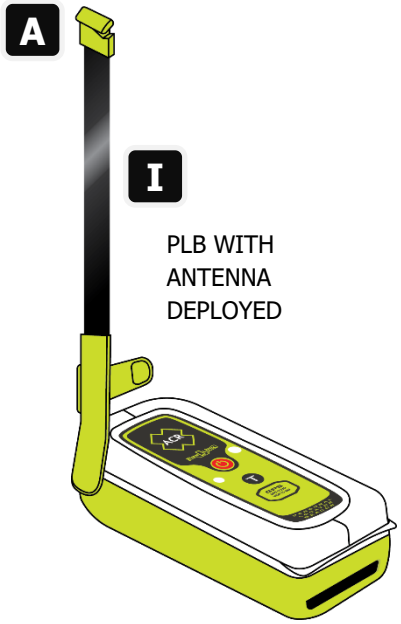

PLB WITH
ANTENNA
DEPLOYED

Anatomy of your Beacon (PLB-435)

Anatomy of your Beacon

The PLB-435 includes all the features (A through I) marked on the PLB-410 diagram on the previous page. The PLB-410 and PLB-435 are functionally the same except the PLB-435 also includes a digital screen as depicted by letter "J" in the diagram to the right.

Throughout the rest of the manual, beacon images which include a screen represent the PLB-435 and images without a screen represent the PLB-410.

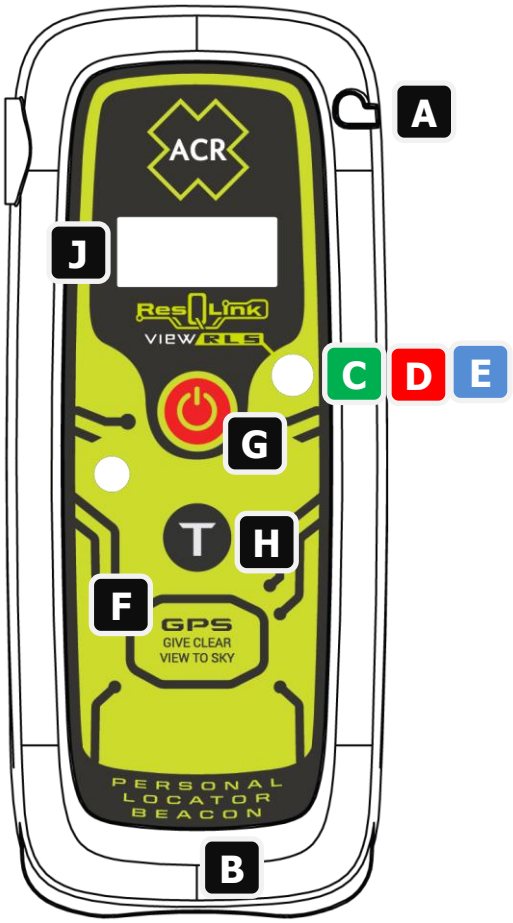

WARNING: This transmitter is authorized for use only during situations of grave and imminent danger. Deliberate misuse may incur a severe penalty.

Activating Your Beacon

Overview

Personal Locator Beacons are designed to be manually activated. They are only to be activated when all other means of self-rescue have been exhausted. When properly registered as required, the activation of the beacon tells Search and Rescue who you are, where you are, and that you are facing a life-threatening situation. Note: Beacon should be activated in open space with clear view of the sky (eg. Not under any sort of cover or canopy)

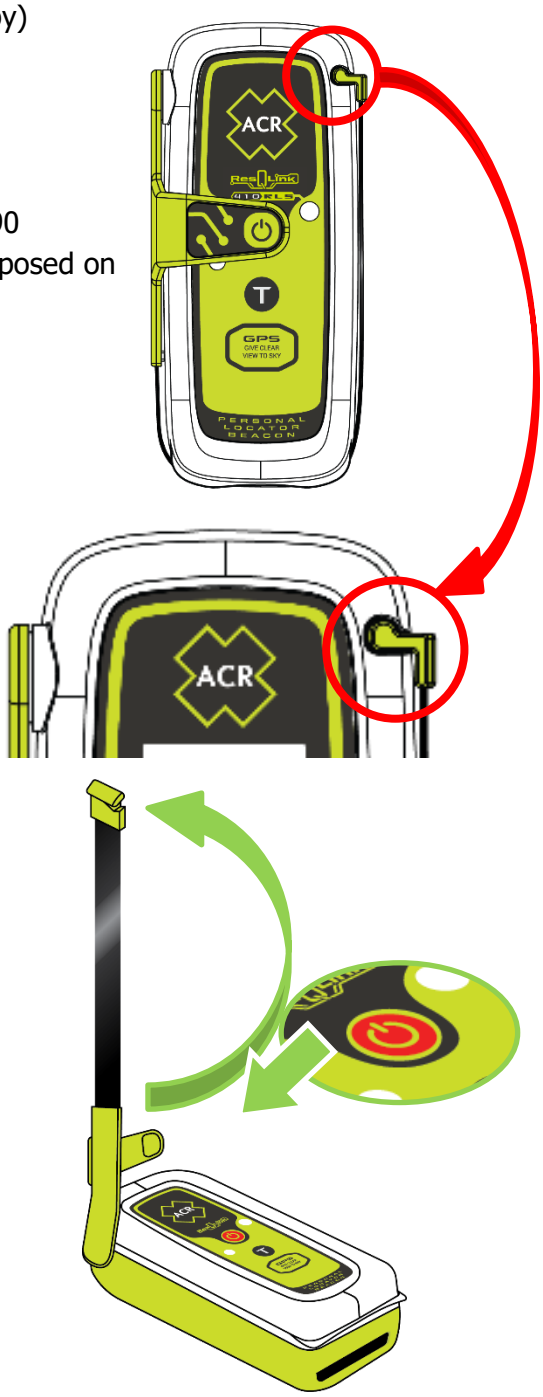

How to Activate Your Beacon

To activate your beacon in a distress situation, follow these steps:

1. Unclip the antenna latch from the case and rotate antenna 90 degrees into the upright position. (ON/OFF button will be exposed on face of beacon once antenna is in upright position)
2. Depress the ON/OFF button for 2 seconds.

When activated:

The strobe light will flash twice and the red LED will flash once to let you know the beacon has been activated. The strobe light and Infrared (IR) strobe light will both then continue to flash once approximately every 10 seconds for the entire time the beacon is activated (Note: The IR strobe is not visible to the naked eye). The red LED will flash approximately once every 5 seconds prior to the beacon acquiring your GPS coordinates.

Once the beacon acquires your GPS coordinates, the flashing red light will be replaced by a flashing green light which will flash approximately once every 5 seconds. The flashing green light indicates the beacon is transmitting your GPS coordinates along with your 406 MHz distress signal.

Fifty seconds after activation, a single blue light will flash between flashes of the red or green light, indicating that the RLS (Return Link Service) emergency message has been sent to SAR (Search and Rescue) authorities. Once the single blue flash changes to a double blue flash, this confirms that your emergency RLS message has been received by SAR authorities.

Activating Your Beacon (continued)

Activation with GPS

When your unit is activated, the GPS receiver will turn on, search to find your Latitude (LAT) / Longitude (LON), and incorporate it into your 406 MHz signal.

For the first 6 hours after beacon activation, the internal GPS will search once every 30 minutes to find your LAT/LON and incorporate it into your next 406 MHz signal. If for any reason the internal GPS cannot update your LAT/LON, your last position will be used for the next four hours - at that time, the green LED will stop blinking and the red LED will flash once every 5 seconds until new GPS data is obtained. Between 6 hours and the end of operating life (minimum of 24 hours), a GPS location update is attempted every 60 minutes.

GPS receiver orientation

When activated, it is critical that you do not cover the beacon with any body part, water, clothing, etc. The GPS receiver is located under the bottom portion of the case where it is outlined with the text "GPS, Give Clear View to Sky".

To ensure optimum performance of the GPS receiver, the beacon needs to have an unobstructed view of the sky. PLB will not work submerged in water. Water will shield and inhibit the GPS receiver and may cause difficulties obtaining your GPS coordinates. Avoid leaning over the beacon to view blinking LEDs (or blinking LEDs and/or the screen on the PLB-435 model) as you may shield GPS reception.

Red Flashing Light =
Sending 406 MHz signal without GPS coordinates

Green Flashing Light =
Sending 406 MHz signal with GPS coordinates

Blue Flashing Light =
RLS functionality active.

Activating Your Beacon

Proper Positioning and Handling during Activation

Do not cover the GPS receiver with your hand and make sure you have a clear view of the sky to ensure GPS is acquired.

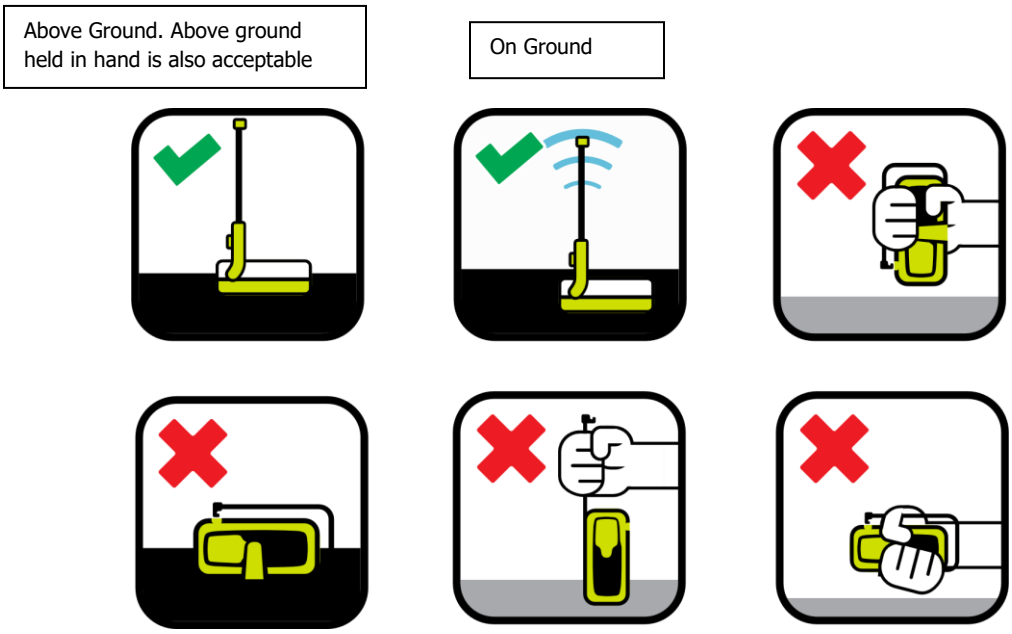

Intended Operational Environments:

Make sure the antenna is pointing towards the sky, out of the water. PLB will not work submerged in water. While the unit is waterproof, it must be above the water's surface to function properly.

Intended operational environments include on ground, above ground, and held in hand. In all cases, the beacon must be facing skyward with the antenna perpendicular.

Proper Positioning and Handling During Activation - When Attached to a Personal Flotation Device (PFD)

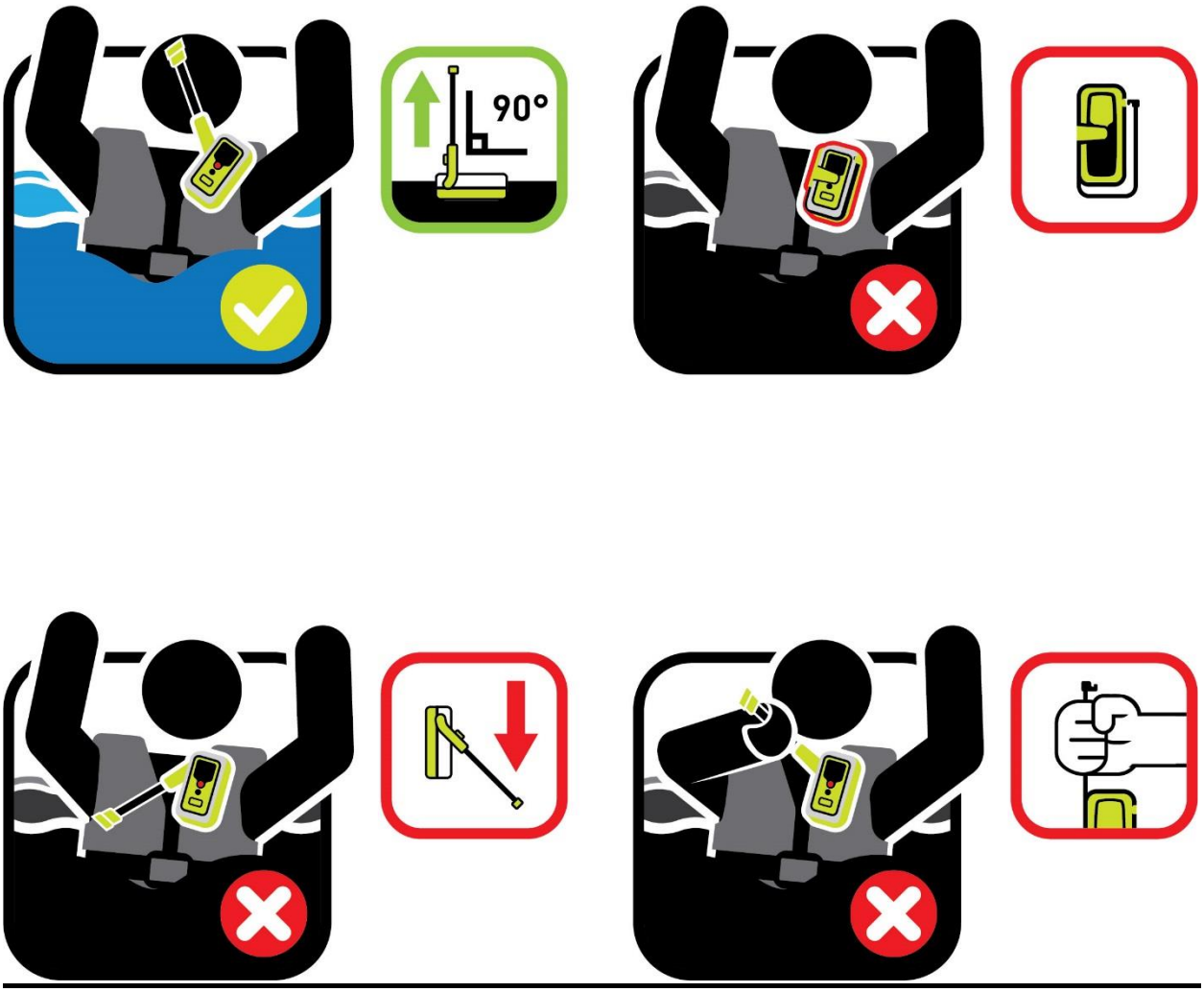

User Interface: Digital Display during Operation (specific to PLB-435 model only)

The following table describes the visual feedback on the digital display that the PLB-435 provides during activation.

Digital Display Feedback During Activation	
	The ACR logo appears indicating the beacon has been activated.
	The system reports that it is in the process of acquiring GPS. While acquiring GPS connection, the system reminds you that for optimum GPS performance, position the beacon so that it has a clear view of the sky. It will also recommend other useful operating advise such as, "Do Not Hold Antenna".
	The system will notify you when it is about to transmit your 406 MHz emergency distress signal. It will countdown from 3 prior to sending.
	You will receive a confirmation message once a 406 MHz Emergency Signal has been transmitted.
	The system reports that the 121.5 MHz homing signal is on. Search and Rescue (SAR) personnel use this frequency to triangulate your location when arriving close to the scene.
	The system reports recently acquired GPS coordinates.
	The beacon provides confirmation when the emergency RLS message has been sent.
	The beacon provides confirmation once the emergency RLS message has been received by SAR.

The beacon will continue to send your distress message for the life of the battery (minimum 24 hours). While valid GPS coordinates are available, the on-screen sequence will reflect the table above when each distress message is sent. If valid GPS coordinates are not obtained after initial activation, your distress message will continue to be sent without GPS coordinates until valid GPS coordinates are obtained. The on-screen sequence when valid GPS coordinates are not available will reflect the table above, except for the screen showing the GPS coordinates. The last two screens reflected in the table above offer confirmation of RLS functionality.

Turning Your Beacon Off

Turning off the beacon

To deactivate your beacon, depress the ON/OFF button for 2 seconds. You will see 2 fast green LED flashes and all blinking LED lights will stop (and the screen will turn off on the PLB-435 model), signifying that the beacon is no longer sending your distress message.

NOTE: Leave beacon on until rescued. Turning the beacon off will prolong or prevent rescue. Repeated activations could be viewed as a hoax.

Post Rescue Follow Up

Hopefully you are never put in the situation where you have to activate your beacon to be rescued, however, should you activate your beacon in an emergency that requires Search and Rescue (SAR) assistance, please contact ACR Electronics, Inc. in the days that follow.

It is important for us to learn the nature of your emergency and how the beacon performed so that we can continue to build the world's best lifesaving equipment.

Real life activations and how people use our beacons in these situations plays a major role in designing and manufacturing our products. We also like to share these rescues with others in an effort to promote proper use of Personal Locator Beacons.

You can learn more about our Post Rescue Follow Ups by visiting the Survivor Club section of our website.

Testing Your Beacon

Your beacon has the ability to perform 2 different tests to ensure that the beacon is working perfectly. The first is a basic self-test which checks the beacon's design performance and sends a self-test message transmitted with default location data. The second is a GPS/GNSS self-test that turns the GPS receiver on, acquires your position and then transmits this data in a 406 MHz self-test satellite burst (GPS and GNSS are used interchangeably to describe the GPS/GNSS Test).

NOTE: Self-test should only be performed in the first 5 minutes of any hour.

Basic Self-Test (No GPS Data)

During a self-test, your beacon will send a 406 MHz signal coded as a self-test to the satellite system and will also momentarily activate the 121.5 MHz homing signal.

The beacon has enough excess battery life to perform 60 self-tests over the 5 year life of the battery.

To perform a basic self-test:

1. Unclip the antenna latch from the case and rotate antenna 90 degrees into the upright position. (ON/OFF button will be exposed on face of beacon once antenna is in upright position)
2. Depress the Test button between 2 to 5 seconds.
3. A quick flash of the blue LED is an indicator that Self-Test was initiated. This will always be the first LED flash in the self-test sequence.

The self-test light sequence is as follows: A blue LED will flash to show the start of the Self-Test. For a successfully "passed" self-test, the blue LED flash will be followed by 3 green LED flashes and a strobe flash. The PLB-435 will show this light sequence and will also flash a message on the screen saying "Self-Test Pass" at the end of the self-test.

Any red LED flash observed in the above sequence indicates that the beacon has failed self-test. Repeat the self-test. If the failure persists, contact ACR Electronics, Inc. or an authorized Battery Replacement Center (BRC) for servicing of your beacon. The PLB-435 will flash a message saying "Self-Test Fail" at the end of a failed self-test.

ACR strongly recommends performing the **self-test once per month**, or at least two weeks prior to a trip, allowing enough time for service should your beacon require it. Do not exceed the self-test limit to ensure confidence in the operation of the PLB for at least 24 hours.

Low Battery Indicator during Self-Test

If the total ON time of the beacon exceeds 2 hours, the beacon will flash the red LED twice at the completion of the self-test. In addition to the LED indicators, the display on the PLB-435 will indicate a "Self-Test Fail" and will show a low battery warning. While the beacon may still operate normally in a distress situation, ACR strongly recommends you have your battery replaced to ensure that you will have at least 24 hours of battery power in an emergency.

User Interface: Digital Display during Self-Test (specific to PLB-435 model only)

The following table describes the visual feedback on the digital display that the PLB-435 provides during a Self-Test.

Digital Display Feedback During a Passed Self-Test	
	The ACR logo appears indicating that the Beacon Self-Test has been initiated.
	The system performs a thorough testing of the beacon's functionality and all tests pass.

Digital Display Feedback When Battery is Low	
	Beacon Self-Test has been initiated, and the ACR Electronics Welcome Page appears.
	The system checks the duration of battery usage. If more than two hours of battery life have been used, this Self-Test Fail message is displayed.
	The system provides a low battery warning indicating that the beacon is due for a battery replacement. The battery can be replaced by ACR or an ACR Authorized Battery Replacement Center (visit www.acrartex.com and select the "Dealer Locator" option in the "Support" section of the site to find an authorized dealer).

Digital Display Feedback During a Failed Self-Test	
	Beacon Self-Test has been initiated, and the ACR Electronics Welcome Page appears.
	The system performs a thorough testing of the beacon's functionality and displays this message if any of the tests fail. The beacon should be returned to ACR Electronics.

Testing Your Beacon

GPS Self-Test (GNSS Self-Test)

The GPS receiver is located under the bottom front portion of the case (indicated by "GPS Give Clear View to Sky"). It is imperative that the receiver is not obstructed during the GPS self-test or during activation to ensure that the GPS receiver is acquiring your latitude (LAT) and longitude (LON) position. This test must be performed outside with a clear view of the sky.

This beacon has enough excess battery life to perform 20 GPS self-tests over the 5 year life of the battery. Once this GPS testing feature reaches 20 tests, the feature will be disabled by internal software.

To perform a GPS self-test:

1. Unclip the antenna latch from the case and rotate antenna 90 degrees into the upright position. (ON/OFF button will be exposed on face of beacon once antenna is in upright position).
2. Depress the "Test" button between 5 and 10 seconds.

The GPS self-test light sequence is as follows: A blue LED will flash followed by 3 quick blue LED flashes indicating that the GPS self-test has begun. Subsequent red LED flashes will occur approximately every 5 seconds until GPS has been acquired by the beacon. Once valid GPS data has been obtained, a long green LED flash and a strobe flash will occur, indicating a successful GPS self-test. As long as the beacon is unable to acquire GPS coordinates, the beacon will continue flashing the red LED for no longer than 110 seconds and then terminate GPS self-test, indicating a failed GPS self-test. In case of a failed GPS self-test, repeat GPS self-test and if failure persists, return the beacon to ACR Electronics, Inc. for service. The PLB-410 and PLB-435 will both display the same LED sequences but the PLB-435 will also display the following 3 things on the screen to show a passed GPS Test: GPS Coordinates, "GNSS Test Pass," and the total number of GPS tests remaining that the beacon is able to run. In the event of a failed GPS Test, the PLB-435 will display the following on the screen: "GNSS Test Fail" followed by the total number of GPS tests remaining that the beacon is able to run.

The maximum number of GPS tests allowed is 20. If the user tries to perform another GPS test after the maximum of 20 has been reached, there will be a green LED flash, followed by 3 quick green LED flashes, followed by 3 red LED flashes and the beacon will then turn off (in addition to the 3 red LED flashes, the PLB-435 will display a message on the screen indicating that the GPS Test Limit has been reached). Additionally, if the total ON time of the beacon exceeds 2 hours, the beacon will not allow any more GPS tests to run.

Quick Tip:

A basic self-test will take roughly 15 seconds to perform and complete.

A GPS self-test will take no longer than 110 seconds to perform and complete.

User Interface: Digital Display during GPS/GNSS Test

(specific to PLB-435 model only)

Digital Display Feedback During a Passed GPS/GNSS Test	
	The ACR logo appears indicating that the beacon GPS/GNSS Test has been initiated.
	The system reports that it is in the process of acquiring GPS. While acquiring GPS connection, the system reminds you that for optimum GPS performance, position the beacon so that it has a clear view of the sky. It will also recommend other useful operating advise such as, "Do Not Hold Antenna".
	The system acquires your GPS coordinates and displays them.
	The system confirms that it has passed the test.
	The system will report the remaining number of GPS/GNSS Tests available.

Digital Display Feedback During a Failed GPS/GNSS Test	
	Beacon GPS/GNSS Test has been initiated, and the ACR Electronics Welcome Page appears.
	The system reports that it is in the process of acquiring GPS. While acquiring GPS connection, the system reminds you that for optimum GPS performance, position the beacon so that it has a clear view of the sky. It will also recommend other useful operating advise such as, "Do Not Hold Antenna".
	The system will notify you that it has failed the test.
	The system will end with the remaining amounts of GPS/GNSS Tests available.

Satellite Testing Your Beacon

Optional Advanced through Satellite Testing and Beacon Management

Additional features and through satellite testing services are available for this beacon when you subscribe to www.406Link.com.

When you sign up for this optional service you can test your beacon and have confirmation messages sent to your cell phone or email. Visit 406Link.com for complete details. (This service is not required for your beacon to function as a Personal Locator Beacon.)

Service limited to North and South America. See coverage map at www.406Link.com.

False Alarms

Preventing False Alerts

A false alert is any activation of the beacon, intentional or otherwise, that does not result from a situation of grave and imminent danger. Be sure to do the following to help minimize false alerts:

Register your Beacon

This does not reduce false alerts; however, when the beacon is properly registered, the situation can usually be resolved with a phone call.

Keep Track of your Beacon

When not in your possession, be careful with whom you leave your beacon. Make sure they know how to use it, and that they understand the ramifications of causing a false alert. A lot of false alerts are generated by curious individuals. If you notice the beacon is flashing the red or green LED and strobing periodically on its own, this likely means it has accidentally been activated and needs to be shut off and reported.

> NOTE: If you report a false alert and the authorities have not received the signal, do not be concerned. This may mean that you were able to deactivate the beacon before the signal was transmitted.

False Alert

A 406 MHz false alert **MUST** be reported to the search and rescue authorities.

To report a 406 MHz **false alert in the United States**, contact:

United States Air force Rescue Coordination Center (AFRCC)

Telephone: 1-800-851-3051

To report a **false alert outside of the United States**, contact the national authority where your beacon is registered. False alerts in Canada, notify the Canadian Mission Control Center by calling 1-800-211-8107. False alerts in Australia, inform the Australian Maritime Safety Authority, Joint Rescue Coordination Centre (JRCC Australia) and false alerts in New Zealand, inform the Rescue Coordination Centre New Zealand (RCCNZ).

Reporting

Should there be a false alert for any reason, it must be reported to the nearest search and rescue authorities. The information that should be reported includes:

- The PLB's 15-digit Unique Identifier Number (UIN). Also identified as the 15-digit Hex ID
- Time and date
- Duration and cause of activation
- Location of beacon at the time of activation

Beacon Maintenance

Routine Maintenance

Carefully inspect the beacon case for any visible cracks. Cracks may admit moisture, which could falsely activate the beacon or otherwise cause a malfunction. Any cracks observed should be immediately referred to ACR for evaluation by calling +1 (954) 862-2110. ACR Technical Support can also be reached by sending an email to: service@acrartex.com.

After checking the beacon for cracks, it may be wiped down with a clean, damp cloth. Do not use any type of cleaner on your beacon.

Battery Replacement

Replace the battery no later than the battery expiration date specified on the beacon, or after emergency use. At each inspection, check the time remaining until replacement is required. The battery should be replaced if the beacon has been activated for any use other than the self-test/GPS test. Always refer battery replacements and other beacon service to a factory authorized Battery Replacement Center.

NOTE: There are no user serviceable items inside the beacon. DO NOT OPEN THE BEACON. Opening the beacon will void the warranty.

For the nearest location of a Battery Replacement Center, visit our website and utilize the Dealer Locator feature located in the Support section of the site.

Beacon Transport

This beacon contains 1 lithium metal battery pack that is less than 0.8 grams. The beacon is not classified as HAZMAT for transportation. Prior to shipping the beacon for service, alert your carriers about the batteries contained in this equipment to make sure they properly label your package. Call ACR's Technical Service department at +1 (954) 862-2110 for proper shipping instructions or visit the ACR website for an MSDS.

- Always pack your PLB in a stout cardboard carton. ACR advises that you keep the original packaging in case of return for service
- For surface transport the PLB may be shipped 'excepted' under special provision 188
- For air transport the PLB should be shipped as category UN3091 and packed under IATA packing instruction 970 section II.

Changing ownership or contact information

As the owner of the beacon, it is your responsibility to advise the national authority of any change in your registration information. If you are transferring the beacon to a new owner, you are required to inform the national authority. You can do this by using their online database or by letter, fax or telephone and informing the authority of the name and address of the new owner.

The new owner of the beacon is required to provide the national authority with all of the information requested on the registration form. This obligation transfers to all subsequent owners.

Lost or Stolen PLBs

<u>If your PLB is lost or stolen, do the following immediately:</u>

- Report to your local authorities that the PLB has been lost or stolen.
- Contact your National Authority with the following information:
    - Police department name
    - Police department phone number
    - Police case number

If your PLB were to be activated, the information you provided will be forwarded to the appropriate search and rescue authorities who will ensure that your PLB gets back to you.

If someone attempts to register a PLB reported as stolen, your national authority will notify the appropriate police department.

Product Specifications

General/Environmental	
Product Number	2931
Model Number	PLB-410
Beacon model hardware part number	A3-06-3138-3
Size	4.52 (L) x 2.03 (W) x 1.49” (D)
Weight	5.2 oz. (148 g)
Buoyancy	Category 1, Buoyant The PLB-410 is a buoyant PLB but will not work submerged in water. Intended operational environments include on ground and above ground including held in hand. In all cases, the beacon must be facing skyward with the antenna perpendicular.
Product Number	2932
Model number	PLB-435
Beacon model hardware part number	A3-06-3138-2
Size	4.52 (L) x 2.03 (W) x 1.49” (D)

Weight	5.3 oz. (151 g)
Buoyancy	Category 1, buoyant The PLB-435 is a buoyant PLB but will not work submerged in water. Intended operational environments include on ground and above ground including held in hand. In all cases, the beacon must be facing skyward with the antenna perpendicular.
Material	High impact and UV resistant plastic
Color	ACR-treuse™ (high visibility yellow)
Strobe	Bright white, one flash per ten seconds
Activation	Manual
Operation	2 steps: deploy antenna, press ON button. Give clear view to sky.
Waterproof	16.40 ft. (5m) @ 1 hr., 33 ft. (10m) @ 10 min. Factory tested @70° F, exceeds RTCM waterproof requirements.
Approvals	Pending: Cospas-Sarsat, FCC, RED (R&TTE), Canada, AMSA PLB-410/435 meets the requirements of Federal Communications Commission (FCC) Part 95 Subpart K. For all other types of approval information, please visit www.acrartex.com.
Limited Warranty	5 years
Lead Free	Yes

Battery	
Batteries meet the UN Classification for non-dangerous goods.	
Class	Class 2 (non-hazmat) lithium batteries
Battery Replacement	Replace battery by due date specified on the unit (five (5) years from date of installation of battery in the beacon) or after emergency use.
Battery Life	Five (5) years
Operational Life	Minimum 24 hours @ -4°F/-20°C to +131°F/+55°C
406 MHz Transmitter	
Frequency	406.031 MHz
Output Power	5+ Watts
Stability	2 ppb/100ms

Modulation	
Type	Phase (16K0G1D)
Digital Message	
Format	144 bits
Long Message	Serialized Beacons are shipped from ACR with a serialized code but can be reprogrammed at a service center to other coded formats including nationality of registration.
Message Protocol	Standard Location and National Location
Duration	520 ms
Rate	400 bps
Encoding	Biphase L
Modulation	±1.1 radians peak
121.5 MHz Transmitter	
Frequency	121.5 MHz
Tolerance	±50 ppm
Output Power	>25mW PEP (typical 79mW) (17 dBm)
Morse Code "P" ID	Approximately every 50 seconds (U.S. protocol)

Temperature Range	
Operating	-4°F/-20°C to +131°F/+55°C
Storage	-22°F/-30°C to +158°F/+70°C
Modulation	
Type	AM (3K20A3X)
Sweep Range	500 to 1600 Hz
Sweep Rate	4 Hz
Duty Cycle	33.3%
Morse P	AM (2K00A2A)
Antenna	
Frequency	406.031 MHz and 121.5 MHz

Polarization	Vertical
VSWR	Less than 1.5:1

Hereby, ACR Electronics declares that the radio equipment type Personal Locator Beacon (PLB) is in compliance with Directive 2014/53/EU. The full text of the EU declaration of conformity is available at the following internet address: www.acrartex.com.

CAUTION: Contains lithium batteries. Do not incinerate, puncture, deform, short-circuit or recharge. Do not dismantle the PLB, contains no user-serviceable parts. Dispose of the used PLB with the battery removed in accordance with local waste disposal regulations.

Product Warranty

Limited Warranty

This product is warranted against factory defects in material and workmanship for a period of five years* from date of purchase or receipt as a gift. During the warranty period, ACR Electronics, Inc. will repair or, at its option, replace the unit at no cost to you for labor, materials and return transportation from ACR. For further assistance, please email our Technical Service Department at service@acrartex.com or telephone at +1 (954) 862-2110.

This warranty does not apply if the product has been damaged by accident or misuse, or as a result of service or modification performed by an unauthorized factory. Except as otherwise expressly stated in the previous paragraph, THE COMPANY MAKES NO REPRESENTATION OR WARRANTY OF ANY KIND, EXPRESS OR IMPLIED, AS TO MERCHANTABILITY, FITNESS FOR A PARTICULAR PURPOSE, OR ANY OTHER MATTER WITH RESPECT TO THIS PRODUCT. The Company shall not be liable for consequential or special damages.

To place the warranty in effect, register online at www.acrartex.com.

* Five years for the following products: EPIRB and PLB.

Appendix A – Accessories

Custom ACR Skins

Custom ACR skins are available for both the PLB-410 and PLB-435 models. The PLB-435 comes with two skins (Camouflage and Aqua Marine as shown in the image below) included when purchased. Additional skins will be available for both the PLB-410 and PLB-435 at www.acrartex.com. Use of these exclusive ACR skins allow PLB-410 and PLB-435 beacon owners to create a customized beacon tailored to their specific lifestyle and preferred activities.

Application of the skins to the beacon's face is simple. Simply remove the skin from its liner and apply to the face of your PLB-410 or PLB-435 using the LED cutouts in the skin as a guide for correct placement. Once the skin has been applied to the face of the beacon, the matching antenna arm skin can be applied to the section of the antenna arm which covers the Power (on/off) button on the face of the PLB.

Users can keep the skins on the face of their beacon and on the antenna arm Power button cover for as long as they like. If at any time the user wishes to remove the skins, simply peel the skins off of the PLB (the adhesive used to adhere the skins to the PLB does not leave any residue so users can choose to not apply another skin and simply use the beacon in the form it was when purchased, or they can choose to apply a different skin design to the beacon). Please note that the skin applied to the face of the PLB should be removed by peeling the skin from either the bottom right or left corner of the skin. As can be noted, the skin for the face of the beacon is slightly smaller than the face of the PLB and intentionally creates an area at either the bottom right or left of the face of the PLB where the skin can be peeled off without interfering with the main face label of the PLB (as can be seen below, there are instructions on the skin liner indicating the corners which should be used when peeling the skin off of the PLB).

Multifunction Accessory Clips

Indented areas on each side of the back case of the PLB shown below provide different attachment options. Users can utilize either the Belt Clip or the Oral Inflation Clip (both come included with the beacon) to provide different wearability options.

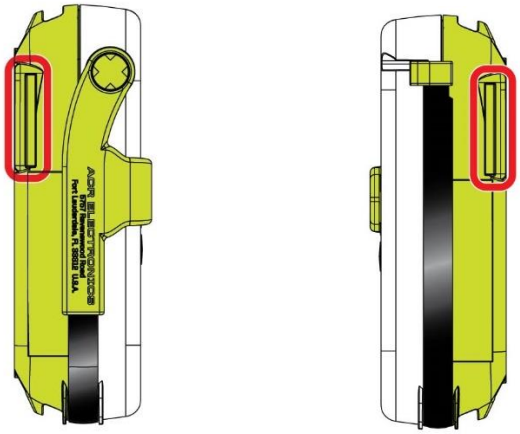

The Belt Clip and Oral Inflation Clip are attached to the beacon as shown below. Please note that the Oral Inflation Clip (for use when attaching the beacon to the Oral Inflation Tube on a lifejacket) is designed to be used in conjunction with the black mounting strap as shown. The purpose of the mounting strap is to prevent the Oral Inflation Clip from detaching from the Oral Inflation Tube of the lifejacket. Additionally, the belt clip can be used in conjunction with the provided velcro strap (more detail provided later in this section).

Belt Clip

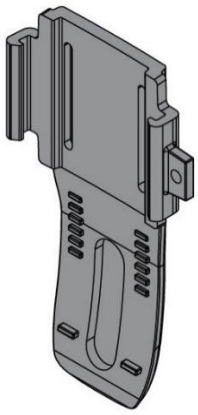

Oral Inflation Clip with Mounting Strap Attached

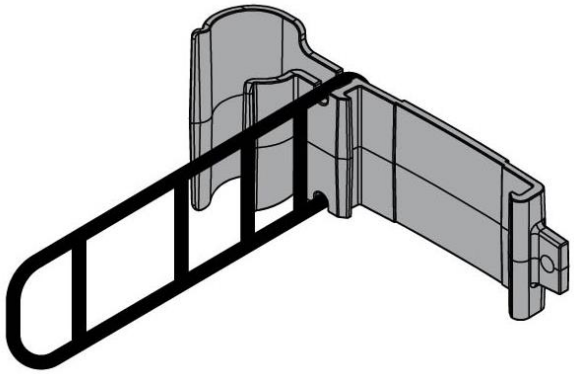

Attaching Belt Clip to Beacon

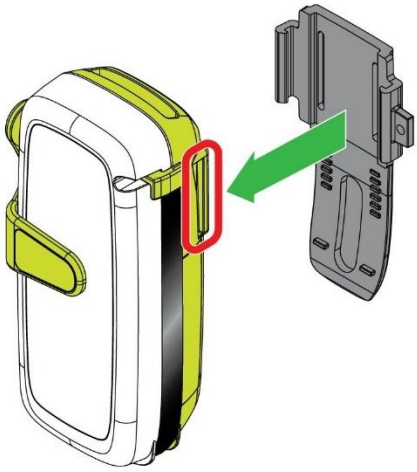

Attaching Oral Inflation Clip (with Mounting Strap Attached) to Beacon

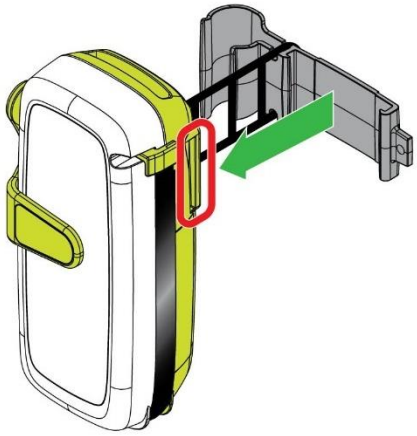

Attachment to Lifejacket Oral Inflation Tube Using Oral Inflation Clip

After attaching the Oral Inflation Clip (with mounting strap attached to the clip) as shown above, steps 1-4 below show how the clip is attached to the lifejacket's Oral Inflation Tube.

Step 1

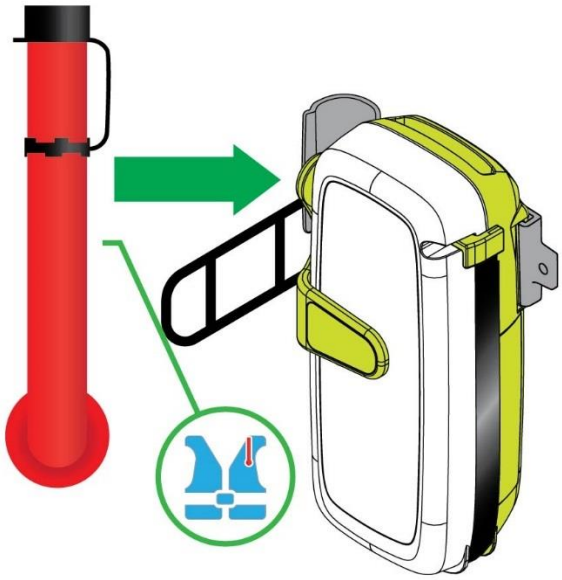

Step 2

Step 3

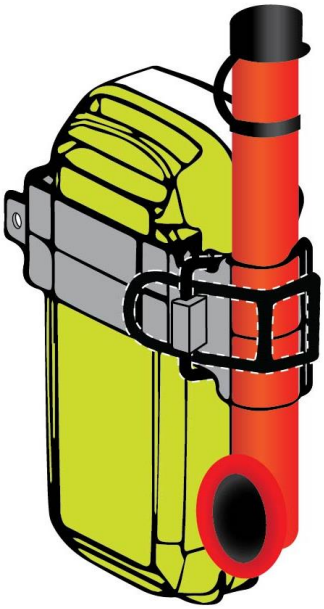

Step 4

Note: Step 4 above requires use of the lanyard (included with your beacon) to attach the clip to the beacon as shown. One side of the lanyard should be threaded through the small hole on the side of the clip and then tied to the clip using a secure knot. The other side of the lanyard should be tied to the beacon using a secure knot (see step 4 on prior page for location where lanyard should be tied to the beacon). This offers a failsafe to ensure the beacon is not separated from the clip. The lanyard should be utilized in this same manner when using the Belt Clip.

Belt Clip
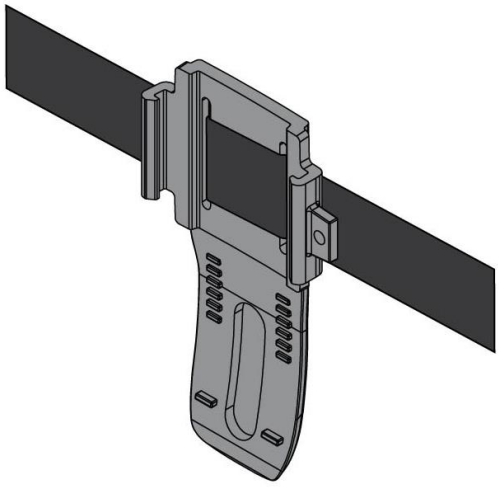
In addition to enabling the user to attach the PLB to a belt, the Belt Clip can also be used in conjunction with the provided velcro strap for a variety of different usage applications (eg. attachment to backpack straps etc.). In order to utilize the velcro strap, thread it through the holes in the Belt Clip (as shown below) and then attach the Belt Clip to the PLB as shown in the images at the beginning of this section. After attaching the Belt Clip to the PLB, the lanyard should be attached to the Belt Clip in the same fashion as shown in the image for Step 4 of attaching the Oral Inflation Clip to the Oral Inflation Tube.