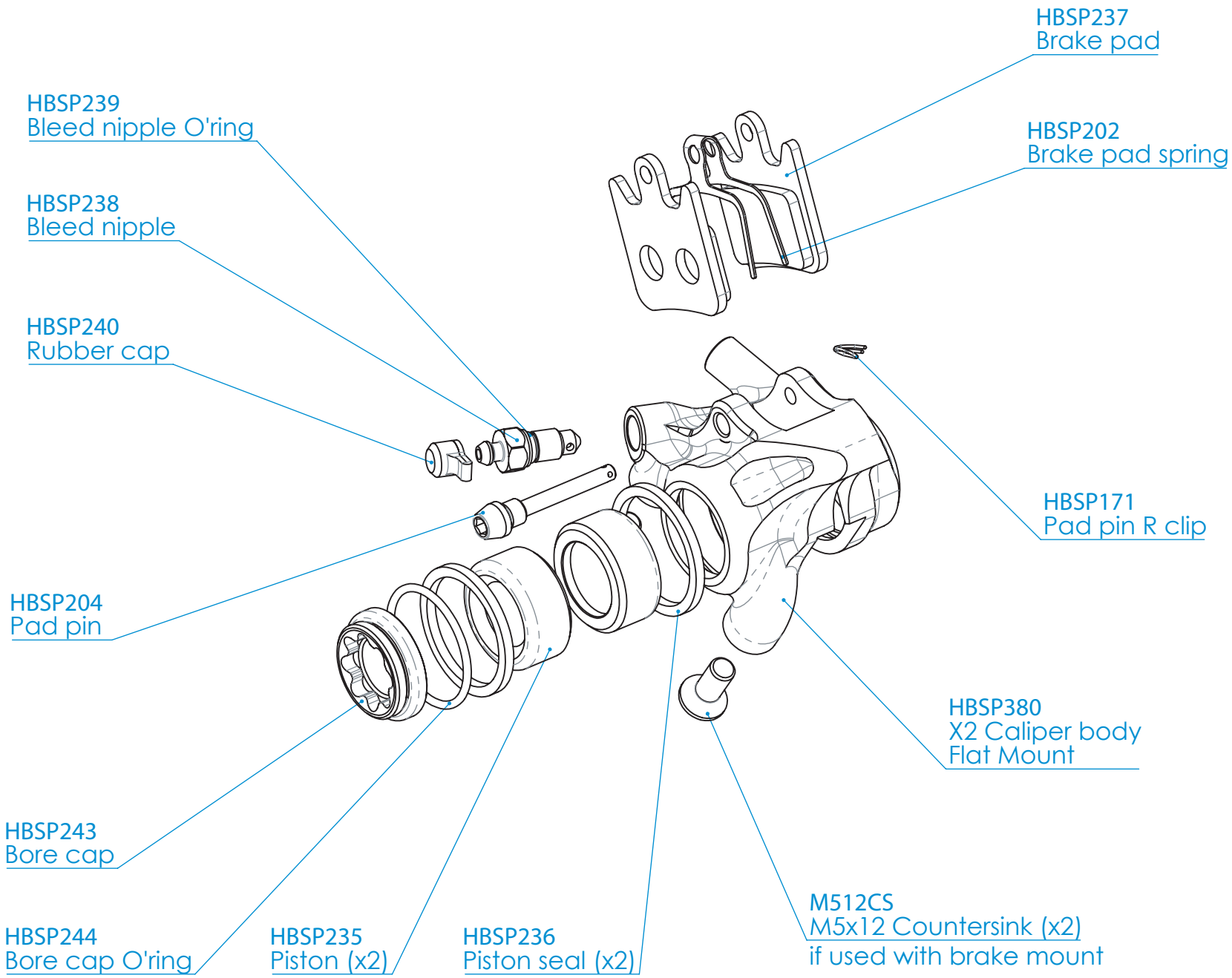

Issue_00: 09/2019