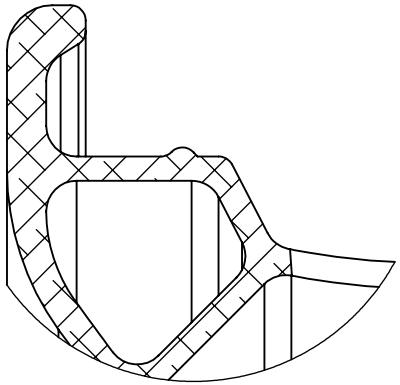

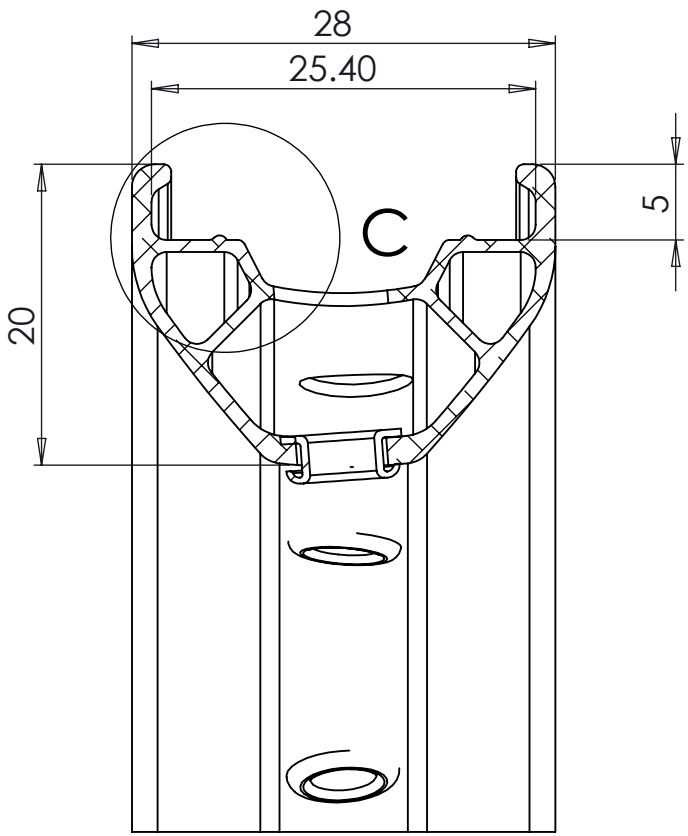

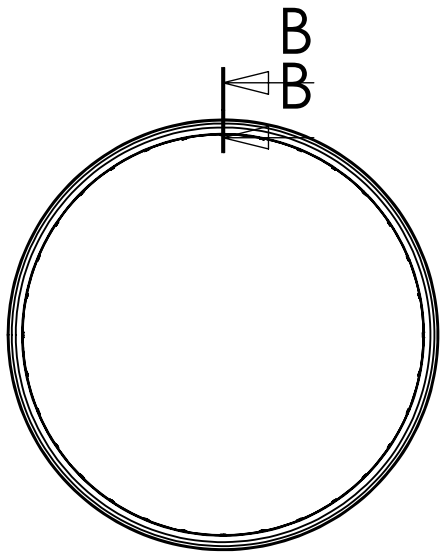

enduro rim section

Hope Technology